OLD MACDONALD HAD A BAND

Traditional Words and Tune
Song Sheet and Chords Arranged by ELEG for SBWE
First note is C

C F C
Old MacDonald had a band

C G C
Tra la la la la

C F C
And in her band she had a _____

C G C
Tra la la la la

C
With a _____ here

F
And a _____ there

C
Here a _____

F
There a _____

C F C
Everywhere a _____ _____

C F C
Old MacDonald had a band
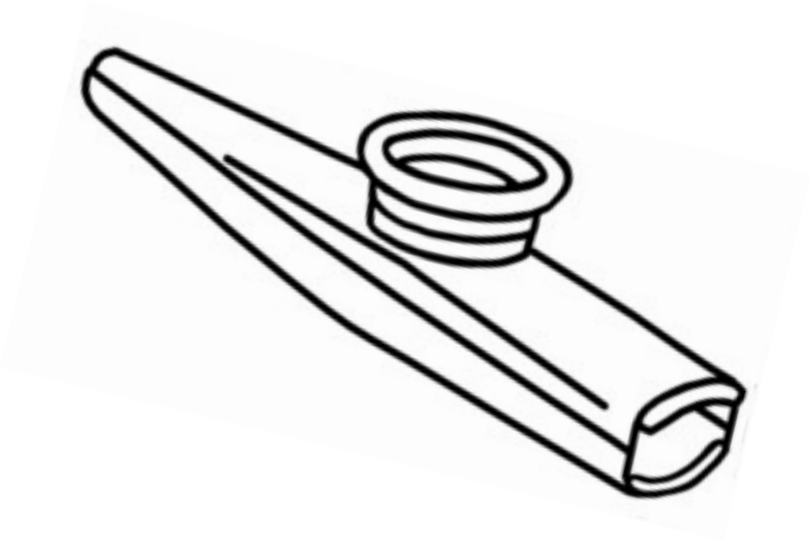
C G C
Tra la la la la